clc96000438
(cont.)

X Collection

INDEX

Page: 1

Barcode Number	Box Number	Total of Volumes	Call Number
LIBRARY OF CONGRESS 0 029 767 336 1	1875A	109	T59.S7 no. 1-109 (1950-62)
LIBRARY OF CONGRESS 0 029 767 337 3	1875B	117	T59.S7 no. 110-226 (1962-69)
LIBRARY OF CONGRESS 0 029 767 338 5	1876A	128	T59.S7 no. 1-128 (1939-61)
LIBRARY OF CONGRESS 0 029 767 339 7	1876B	155	T59.S7 no. 129-283 (1961-Undated)

X-T59
.S7 #110

STANDARDS ASSOCIATION OF AUSTRALIA
Incorporated by Royal Charter

AMDT. No. 1
OCT. 1962

2-JAN-4
Copy 1963

AMENDMENT No. 1
to
SAA Approval and Test Specification
for
DOMESTIC ELECTRIC WASHING MACHINES
(No. C.163—1960 Ap.)

The 1960 edition of A. & T.S. No. C.163 is amended as follows; the amendment should be inserted at the appropriate place.

CLAUSE 18, TESTS.

(b) Spillage and Water Tightness Test.

In the second sentence of the first paragraph *delete* the words "For washing machines other than those incorporating a device to prevent overflow". AMDT. No. 1 OCT. 1962

Delete the second paragraph and *substitute* the following:

Subsequent inspection shall not reveal any water on live parts or on electrical insulation in such quantities or in such locations as may lead to eventual break-down.

This amendment forms part of the specification on 1 April 1963.

PROPERTY OF THE
LIBRARY OF CONGRESS

Miniature

X-T59#111

Endorsement

April 1962

BRITISH STANDARD 1583: 1961

is endorsed as

AUSTRALIAN STANDARD No. R.16 — 1962

subject to the amendments set out in Australian Amendment No. 1

NOTE. *Because B.S.1583 now includes one-mark straight pipettes up to 2-ml capacity, overlapping occurs between this endorsed standard and A.S. No. R.7—1947, Straight Pipettes, in regard to the one-mark 1-ml size. In so far as this latter size is concerned the provisions of A.S. No. R.16 apply.*

STANDARDS ASSOCIATION OF AUSTRALIA
Science House, 157 Gloucester Street, Sydney

Miniature

2 - APR 18
Copy ____ 1963

X-TS9.S7
#112

Endorsement

February 1963

BRITISH STANDARD 173 : 1960

is endorsed as

AUSTRALIAN STANDARD
C2 — 1963

without Australian amendment

STANDARDS ASSOCIATION OF AUSTRALIA
Science House, 157 Gloucester Street, Sydney

Amendment No. 3
March 1963

STANDARDS ASSOCIATION OF AUSTRALIA
Incorporated by Royal Charter

X-T59
.S7 #113

AMENDMENT No. 3

to

SAA Approval and Test Specification

for

RADIO INTERFERENCE SUPPRESSION DEVICES
(AS C145—1960 Ap.)

The 1960 edition of AS C145 Ap., which was previously amended in 1961 and 1962, is further amended as follows; the amendments should be inserted at the appropriate places.

Clause 12 (a), CAPACITORS—Marking.

Delete the word "ONLY" from "A.C. ONLY" and "D.C. ONLY" in item (iii). AMDT. No. 3 MARCH 1963

Add a further note to the clause as follows:

NOTE 2. Incorporation of a capacitor marked "A.C." in an appliance marked "A.C./D.C." is not normally deemed to be contrary to the specification.

This amendment forms part of the specification on 1 April 1963.

PROPERTY OF THE
LIBRARY OF CONGRESS

Amendment No. 5
March 1963

STANDARDS ASSOCIATION OF AUSTRALIA
Incorporated by Royal Charter

X-T59
.S7 #114

AMENDMENT No. 5
to
SAA Approval and Test Specification
for
ELECTRIC MOTOR-OPERATED APPLIANCES
(AS C115—1941 Ap.)

The 1941 edition of AS C115 Ap., which was previously amended in 1958, 1959 and 1961 (twice), is further amended as follows; the amendment should be inserted at the appropriate places.

Clause 4, MECHANICAL GUARDING.

In the fourth line *insert* ", blades of fans," after "gearing".

AMDT. No. 5
MARCH 1963

This amendment forms part of the specification on 1 April 1963.

X-TS9.S7 #115

Amendment No. 6
March 1963

STANDARDS ASSOCIATION OF AUSTRALIA
Incorporated by Royal Charter

AMENDMENT No. 6

to

SAA Approval and Test Specification

for

BAYONET LAMPHOLDERS
(AS C117—1955 Ap.)

The 1939 edition of AS C117 Ap., which was amended and redated in 1947, 1950 and 1955, and amended in 1960 and 1962, is further amended as follows; the amendment should be inserted at the appropriate place.

Clause 7, MATERIALS.

Add the following further paragraph:

Metallic materials used for lampholder skirts shall be of non-ferrous metal having mechanical and corrosion resisting properties not inferior to hard drawn brass. AMDT. No. 6 MARCH 1963

This amendment forms part of the specification on 1 April 1963.

Amendment No. 6
March 1963

STANDARDS ASSOCIATION OF AUSTRALIA
Incorporated by Royal Charter

X-T59
.S7 #116

AMENDMENT No. 6
to
SAA Approval and Test Specification
for
PLUGS AND PLUG-SOCKETS
(AS C112—1958 Ap.)

The 1958 edition of AS C112 Ap., which was previously amended in 1959, 1960, 1961 and 1962 (twice), is further amended as follows; the amendment should be inserted at the appropriate place.

Clause 16 (bb), TESTS—Tests on Integrally Moulded Rubber and PVC Plug and Cord Sets.

(iii) **Attachment of Sheathing (Sheathed Cords).**

Add the following further paragraph:

For plugs moulded to miniature flexible cord, the attachment shall be deemed adequate if the insulated cores are not exposed when the sheathing breaks if this occurs before the maximum pull of 30 lb is reached. AMDT. No. 6 MARCH 1963

This amendment forms part of the specification on 1 April 1963.

PROPERTY OF THE
LIBRARY OF CONGRESS

Amendment No. 4
March 1963

STANDARDS ASSOCIATION OF AUSTRALIA
Incorporated by Royal Charter

X-T59
.S7 #117

AMENDMENT No. 4

to

SAA Approval and Test Specification

for

ELECTRIC JUGS
(AS C106—1952 Ap.)

The 1952 edition of AS C106 Ap., which was previously amended in 1956, 1958 and 1961, is further amended as follows; the amendment should be inserted at the appropriate place.

Clause 6 (c), SAFEGUARDING—Locking of Hinge and Stop Screws.

Add the following further sentence to the first paragraph:

However, lock nuts shall be acceptable as locking devices for stop pins. AMDT. No. 4 MARCH 1963

This amendment forms part of the specification on 1 April 1963.

PROPERTY OF THE
LIBRARY OF CONGRESS

Amendment No. 3
March 1963

STANDARDS ASSOCIATION OF AUSTRALIA
Incorporated by Royal Charter

X-T59
.S7 #18

AMENDMENT No. 3

to

SAA Approval and Test Specification

for

INSULATING PANELS
(AS C108—1951 Ap.)

The 1951 edition of AS C108 Ap., which was previously amended in 1956 and 1957, is further amended as follows; the amendment should be inserted at the appropriate place.

Clause 11, MARKING.

Add the following "note" to this clause:

NOTE. Transfers, painting, stamping or the like are acceptable in terms of this clause. AMDT. No. 3 MARCH 1963

This amendment forms part of the specification on 1 April 1963.

PROPERTY OF THE
LIBRARY OF CONGRESS

Amendment No. 8
March 1963

STANDARDS ASSOCIATION OF AUSTRALIA
Incorporated by Royal Charter

X-T59
.S7 #119

AMENDMENT No. 8

to

SAA Approval and Test Specification

for

ELECTRIC BREAD TOASTERS
(AS C101—1955 Ap.)

The 1940 edition of AS C101 Ap., which was amended and redated in 1947, 1948, 1950 and 1955 and amended in 1955, 1956, 1958 and 1962, is further amended as follows; the amendment should be inserted at the appropriate place.

Clause 8 (g), TESTS—Exposure of Materials and Insulation to Excessive Temperature.

Add the following sentence to the last paragraph:

The temperature limits specified in AS C100 Ap., Clause 109, Temperatures of Surfaces to be Handled, shall not be applicable to toaster handles or to the knobs on side flaps and the like, but the failure of any such part, due to the temperature which it attains, shall not give rise to the risk of fire or electric shock.

AMDT. No. 8 MARCH 1963

This amendment forms part of the specification on 1 April 1963.

PROPERTY OF THE
LIBRARY OF CONGRESS

X-TS9.S7 #120

Interim Amendment
January 1963

STANDARDS ASSOCIATION OF AUSTRALIA
Incorporated by Royal Charter

2 - APR 1 8
Copy ____ 1963

INTERIM AMENDMENT
to
AS A33—1955
CARBON STEEL PLATES FOR GENERAL STRUCTURAL ENGINEERING PURPOSES

NOTE. This amendment to AS A33 has been issued to meet an urgent request for recognition of the basic oxygen process of steel making, as an alternative to the other processes already specifically mentioned. It is issued as an interim amendment because this and related Australian standards for structural steel are under review in other respects also, and complete revised standards are likely to be issued later in 1963. The SAA Committee on Structural Steel expects that, prior to the issue of such revised standards, test results will be available to confirm that steel made by the new process complies fully with mechanical and other test requirements in the standard.

Page 5. **Clause 2, PROCESS.**

Delete existing clause and *substitute* the following:

"2. **Process.** The steel shall be made by an open hearth, a basic oxygen, or an electric process. For the purposes of this specification a basic oxygen process means the process of making steel in a basic converter blown with commercially pure oxygen." INT. AMDT. JAN. 1963

X-T59.S7 # 121

Interim Amendment
January 1963

STANDARDS ASSOCIATION OF AUSTRALIA
Incorporated by Royal Charter

2 - APR 1 8
Copy ___ 1963

INTERIM AMENDMENT
to
AS A81—1958

PLAIN STEEL REINFORCING BARS FOR NORMAL REINFORCED CONCRETE

NOTE. This amendment to AS A81 has been issued to meet an urgent request for recognition of the basic oxygen process of steel making, as an alternative to the other processes already specifically mentioned. It is issued as an interim amendment because this and related Australian standards for structural steel are under review in other respects also, and complete revised standards are likely to be issued later in 1963. The SAA Committee on Structural Steel expects that, prior to the issue of such revised standards, test results will be available to confirm that steel made by the new process complies fully with mechanical and other test requirements in the standard.

Page 3. **Clause 2, PROCESS OF MANUFACTURE.**

Delete existing clause and *substitute* the following:

"2. **PROCESS OF MANUFACTURE.** The steel shall be made by an open hearth, a basic oxygen, or an electric process. For the purpose of this specification a basic oxygen process means the process of making steel in a basic converter blown with commercially pure oxygen. INT. AMDT. JAN. 1963

The bars shall be rolled from billets or ingots of properly identified heats of steel."

X-T59.S7#122

Amendment No. 1
January 1963

STANDARDS ASSOCIATION OF AUSTRALIA
Incorporated by Royal Charter

Amendment No. 1 and Corrigenda

to

Australian Standard Rules

for

AUTOMATIC SPRINKLER INSTALLATIONS (AS CA16—1962)

The 1962 edition of AS CA16 is amended as hereunder; the amendment should be inserted at the page indicated. The corrigenda listed should also be noted.

AMENDMENT

Page 27. **Rule 18, ALARM.**

Add the following paragraph:

"Approved water flow alarm switches may be incorporated in the sprinkler piping to indicate on a central control panel the particular section of the system which is operating." AMDT. No. 1 JAN. 1963

CORRIGENDA

Page 5. **Rule 1 (C).** *Insert* marginal bar and notation "See SR1".

Page 7. **Note 2 to Rule 1 (J).** *Insert* marginal bar and notation "See SR2".

Page 8. **Rule 3 (b).** *Insert* marginal bar and notation "See SR4".

Page 8. **Rule 3 (c).** *Insert* marginal bar and notation "See SR5".

Page 10. **Rule 3 (g).** *Alter* marginal notation to read "See SR6.1 to 6.4".

Page 14. **TOWN'S WATER.** *Insert* opposite head: marginal bar and notation "See SR108.3".

2B Cataloging
Sub. Cat. Div.

Amendment No. 1
February 1963

STANDARDS ASSOCIATION OF AUSTRALIA
Incorporated by Royal Charter

X-T59
.S7 #123

AMENDMENT No. 1

to

AS B113—1960

HIGH TENSILE CARBON-MANGANESE STEEL CYLINDERS FOR THE STORAGE AND TRANSPORT OF PERMANENT GASES AND HIGH PRESSURE LIQUEFIABLE GASES

The above specification is amended as set out hereunder; the amendments should be inserted at the places indicated.

Page 3. **Clause 1, SCOPE.**

Delete paragraph two and *substitute*:

The filling pressure of such cylinders shall be as specified in AS CB4 SAA Code for Compressed Gas Cylinders, viz.: AMDT. No. 1 FEB. 1963

Copy 1963

(i) 120 atmospheres
(ii) 132 atmospheres
(iii) 240 atmospheres

Page 4. **Clause 10, THICKNESS.**

Delete P in the tabulation and *substitute*:

P = maximum pressure in the cylinder for design purposes, and shall be taken as: AMDT. No. 1 FEB. 1963

(i) 2500 lb/sq in for filling pressures not exceeding 1980 lb/sq in at 15°C.
(ii) 5000 lb/sq in for filling pressures not exceeding 3600 lb/sq in at 15°C.

Page 7. **Clause 20, HYDROSTATIC PRESSURE TEST.**

Delete paragraph one and *substitute*:

Every cylinder shall be subjected to a hydrostatic test pressure equal to 1-1/3 times the design pressure in Clause 10 applied internally for a period of 30 seconds in accordance with the provisions of Appendix B of AS CB4. AMDT. No. 1 FEB. 1963

Page 8. **Clause 22, CYLINDER MARKS.**

Add to Item (vii):

and the maximum pressure to which the cylinder is designed in Clause 10 (e.g. AS B113—2500). AMDT. No. 1 FEB. 1963

PROPERTY OF THE
LIBRARY OF CONGRESS

Amendment No. 10
March 1963

STANDARDS ASSOCIATION OF AUSTRALIA
Incorporated by Royal Charter

X-T59
.S7 #124

AMENDMENT No. 10
to
SAA Approval and Test Specification
for
DEFINITIONS AND GENERAL REQUIREMENTS FOR ELECTRICAL MATERIALS AND EQUIPMENT
(AS C100—1953 Ap.)

The 1953 edition of AS C100 Ap., which was previously amended in 1956, 1957, 1958, 1959, 1960, 1961 (twice) and 1962 (twice), is further amended as follows; the amendments should be inserted at the appropriate places.

Definition 35, INSULATED.

Add the following note:

"NOTE. The term 'functional insulation' as described in Definition 37 is also used in respect to the insulation of equipment having exposed metal parts intended to be earthed." AMDT. No. 10 MARCH 1963

This amendment forms part of the specification on 1 April 1963.

Definition 37, INSULATION DOUBLE.

Note 2. *Delete* the words in parentheses at the end of the first line and *substitute:*

"(including flexible cords other than those of the miniature type)". AMDT. No. 10 MARCH 1963

This amendment forms part of the specification on 1 October 1963.

Clause 93, FACILITIES FOR CONNECTION OF FLEXIBLE CORD OR FLEXIBLE CABLE.

(g) **Earthing Conductors.**

Delete existing text of this sub-clause and *substitute:*

(g) **Earthing Conductors.** Where an appliance includes an earthing terminal, provision shall be made by means of space within the terminal enclosure, the disposition of the terminals, a separate conductor way, suitable shielding or other suitable means to ensure that when correctly wired the connection is made without the earthing conductor of the flexible cord being held or pressed against live terminals or other live parts. AMDT. No. 10 MARCH 1963

This amendment forms part of the specification on 1 April 1963.

PROPERTY OF THE
LIBRARY OF CONGRESS

STANDARDS ASSOCIATION OF AUSTRALIA
Incorporated by Royal Charter

X-T59
.S7 #125

AMENDMENT No. 8

to

SAA Approval and Test Specification

for

ELECTRIC ROOM HEATERS
(AS C103—1952 Ap.)

The 1952 editon of AS C103 Ap., which was previously amended in 1956, 1958, 1959 (twice), 1961 (twice) and 1962, is further amended as follows; the amendments should be inserted at the appropriate places.

Clause 7, SWITCHES.

Insert the following "note" to the second paragraph:

NOTE. Removal of a guard alone is not deemed to constitute 'extensive dismantling'. AMDT. No. 8 MARCH 1963

This amendment forms part of the specification on 1 April 1963.

Clause 12 (a), TESTS—Insulation Resistance Test No. 1.

Delete all words after "frame" in the 3rd line of the 1st paragraph. AMDT. No. 8 MARCH 1963

Add the following third paragraph:

Heating units may be operated for one hour at rated voltage and allowed to cool to room temperature prior to the measurement being made if necessary to meet the conditions of the test.

This amendment forms part of the specification on 1 April 1963.

PROPERTY OF THE
LIBRARY OF CONGRESS

Amendment No. 5
March 1963

X-T59
.S7 #176

STANDARDS ASSOCIATION OF AUSTRALIA
Incorporated by Royal Charter

AMENDMENT No. 5

to

SAA Approval and Test Specification

for

APPLIANCE PLUGS AND APPLIANCE INLET SOCKETS (AS C109—1955 Ap.)

The 1955 edition of AS C109 Ap., which was previously amended in 1958 (twice), 1959 and 1962, is further amended as follows; the amendments should be inserted at the appropriate places.

Clause 11, PROTECTION OF FLEXIBLE CORD.

Delete this clause and *substitute:*

11. PROTECTION OF FLEXIBLE CORD. Except for appliance plugs in the form of a cord extension socket complying with SAA Approval and Test Specification C120, Cord Extension Sockets, provision shall be made for preventing sharp bending of, or mechanical damage to, a flexible cord where it enters the body of the appliance plug. AMDT. No. 5 MARCH 1963

For rewirable appliance plugs the protection shall be in the form of a sleeve of rubber or equivalent flexible insulating material and provision shall be made to ensure that the sleeve is held securely in position in the body of the appliance plug when correctly assembled.

For appliance plugs moulded integrally with a flexible cord the protection shall comply generally with the requirements above but the sleeving may be formed as an integral part of the moulding.

This amendment forms part of the specification on 1 April 1963.

Clause 19 (a), SHROUD—Extent and Form.

Add the following further sentence:

Any aperture in the base of the inlet socket shall not permit the entry of objects to the interior of the appliance. AMDT. No. 5 MARCH 1963

This amendment forms part of the specification on 1 April 1963.

PROPERTY OF THE
LIBRARY OF CONGRESS

Amendment No. 3
March 1963

STANDARDS ASSOCIATION OF AUSTRALIA
Incorporated by Royal Charter

X-T59
.S7 #127

AMENDMENT No. 3
to
SAA Approval and Test Specification
for
MINIATURE OVERCURRENT CIRCUIT-BREAKERS
(AS C111—1956 Ap.)

The 1956 edition of AS C111 Ap., which was previously amended in 1959 and 1961, is further amended as follows; the amendments should be inserted at the appropriate places.

Clause 1. SCOPE.

Add the following second paragraph:

Circuit breakers intended only for the protection of electrical equipment as distinct from circuit wiring, and which are appropriately marked as such, are not within the scope of this specification. AMDT. No. 3 MARCH 1963

This amendment forms part of the specification on 1 April 1963.

Clause 3, STANDARD CURRENT RATINGS.

Delete the word "standard" from the title and from the second line and *substitute* "preferred". AMDT. No. 3 MARCH 1963

Add the following "note":

NOTE: At the discretion of the Approvals Authority, a circuit breaker having a current rating between consecutive preferred values listed above may be approved without applying the full series of tests specified in Clause 14 provided that:

(i) the intermediate rating circuit breaker and the preferred rating circuit breakers are physically identical in design and construction except for adjustment of the normal means of calibration, and

(ii) the preferred rating circuit breakers have been subjected to and have passed the full series of tests.

This amendment forms part of the specification on 1 April 1963.

PROPERTY OF THE
LIBRARY OF CONGRESS

STANDARDS ASSOCIATION OF AUSTRALIA
Incorporated by Royal Charter

X-T59
.S7 #178

RULING No. 1
to
SAA Approval and Test Specification
for
DEFINITIONS AND GENERAL REQUIREMENTS FOR ELECTRICAL MATERIALS AND EQUIPMENT
(AS C100—1953 Ap.)

The following rulings to AS C100 Ap. are issued for purposes of clarification and shall apply from 1 April 1963.

Clause 81, MATERIALS AND EQUIPMENT TO BE SUITABLE FOR CONDITONS OF USE.

Thermoplastic materials which have a low melting point or are of a readily flammable nature, such as non flame-retarding grades of polystyrene and polyethylene, shall not be used for the enclosure of starter switches for fluorescent lamps nor for fluorescent lamp-holders and starter switch sockets. RULING No. 1 MARCH 1963

Clause 92A, FLEXIBLE CORD AND CONNECTING PLUG.

Item (i) of this clause refers to the provision of an "appropriate" type of flexible cord. The permissible applications of the various types of flexible cord are specified in general terms in Rule 340(a) of Part 1 of the SAA Wiring Rules, AS CC1. However, some confusion has been evident in regard to the intended application of miniature flexible cord recently provided for in specifications C116 Ap., Rubber Insulated Cables and Flexible Cords, and C147 Ap., PVC Insulated Cables and Flexible Cords. RULING No. 1 MARCH 1963

This ruling is issued with a view to clarifying the matter, but is subject to review as experience is gained in the application of miniature flexible cord.

Miniature flexible cord may be applied in accordance with the following table:

PROPERTY OF THE
LIBRARY OF CONGRESS

STANDARDS ASSOCIATION OF AUSTRALIA
Incorporated by Royal Charter

X-T59
.S7 #129

RULING No. 1
to
SAA Approval and Test Specification
for
DOMESTIC ELECTRIC WASHING MACHINES—
(AS C163—1960 Ap.)

The following rulings to AS C163 Ap. are issued for purposes of clarification pending a detailed investigation into the determination of and tolerance on loading of domestic electric washing machines and shall apply to Clauses 17 and 18(g) from 1 April 1963.

Clause 17, RATING.

The tolerance on measured input shall not be regarded as precluding a variation of more than 10 per cent below the marked input provided that any heating unit is marked with its rated input, and the measured input to the heating unit does not differ therefrom by more or less than 10 per cent.

RULING No. 1 MARCH 1963

Clause 18 (g), TESTS—RATING.

In determining the input of a washing machine incorporating a heating unit or units, the loading of the heating units shall be taken into account in conjunction with the maximum normal load conditions specified in Clause 18(h) as follows:

RULING No. 1 MARCH 1963

The input shall be measured after 5 minutes' operation of the heating unit or units which may be energised with the washing machine switched to that combination of motor(s) and/or heating unit(s) which gives the maximum load condition. In applying the 10 per cent tolerance, the above ruling to Clause 17 shall apply.

PROPERTY OF THE
LIBRARY OF CONGRESS

Amendment No. 8
March 1963

STANDARDS ASSOCIATION OF AUSTRALIA
Incorporated by Royal Charter

X-T59
.S7 #130

AMENDMENT No. 8
to
SAA Approval and Test Specification
for
WALL SWITCHES
(AS C113—1955 Ap.)

The 1947 edition of AS C113—1955 Ap., which was amended and redated in 1950, 1951, 1952 and 1955, and amended in 1956, 1958 and 1960, is further amended as follows; the amendments should be inserted at the appropriate places.

Clause 2, DEFINITION.

Add to the list of exclusions: "delayed action switches".

AMDT. No. 8 MARCH 1963

This amendment forms part of the specification on 1 April 1963.

Clause 11, INDICATING DEVICE.

Add the following further paragraph:

Notwithstanding the above requirements, the provision of arrows, indicating the direction in which the key of a key operated switch is to be turned to procure the "on" or "off" position, is an acceptable indication of the position of the switch contacts.

AMDT. No. 8 MARCH 1963

This amendment forms part of the specification on 1 April 1963.

Clause 13, TESTS.

Add the following further introductory paragraph:

For wall switches which include a neutral looping-in terminal, such switches shall be tested for compliance with the requirements of (d), (dd) and (e) below with the looping-in terminal connected to the neutral conductor of the supply.

AMDT. No. 8 MARCH 1963

This amendment forms part of the specification on 1 April 1963.

Clause 13 (dd), TESTS—Endurance Test (For Switches Marked A.C. Only).

(ii) **Number of Operations.**

Delete the first and second paragraphs and *substitute:*

The switch shall be subjected to the number of operations stipulated below. For two-way, intermediate and multi-way switches, the total number of operations shall be distributed equally over the the number of sets of contacts.

AMDT. No. 8 MARCH 1963

Delete the words "each set of contacts in the switch" from the second line of the last paragraph and *substitute* "a contact".

This amendment forms part of the specification on 1 April 1963.

PROPERTY OF THE
LIBRARY OF CONGRESS

STANDARDS ASSOCIATION OF AUSTRALIA
Incorporated by Royal Charter

X-T59
.S7 #131

AMENDMENT No. 5

to

SAA Approval and Test Specification

for

ELECTRIC SOLDERING IRONS (AS C114—1952 Ap.)

The 1940 edition of AS C114 Ap., which was amended and redated in 1947, 1948, 1950 and 1952, is further amended as follows; the amendments should be inserted at the appropriate places.

Clause 6, MEANS OF CONNECTION AND EARTHING FACILITIES.

Add the following "note":

NOTE. Suitably treated red fibre is acceptable as a terminal block.

AMDT. No. 5 MARCH 1963

This amendment forms part of the specification on 1 April 1963.

NEW CLAUSE 8A.

Add the following new clause 8A :

8A. EXTRA-LOW VOLTAGE TRANSFORMERS. Any extra-low voltage transformer incorporated in, supplied with, or intended for use with an electric soldering device shall comply with the relevant requirements of AS C126 Ap., Extra-low Voltage Transformers.

AMDT. No. 5 MARCH 1963

This amendment forms part of the specification on 1 April 1963.

Amendment No. 2
March 1963

X-T59
.S7 #132

STANDARDS ASSOCIATION OF AUSTRALIA
Incorporated by Royal Charter

AMENDMENT No. 2

to

SAA Approval and Test Specification—

for

NORMAL BAYONET LAMPHOLDER ADAPTORS (AS C119—1951 Ap.)

The 1951 edition of AS C119 Ap., which was previously amended in 1960, is further amended as follows; the amendments should be inserted at the appropriate places.

Clause 4, PROHIBITED TYPES.

Alter the reference in the second paragraph (as amended by Amendment No. 1, December 1960) from "Fig. 1(b)" to "Fig. 1(a)". AMDT. No. 2 MARCH 1963

This amendment forms part of the specification on 1 April 1963.

NEW CLAUSE 9A.

Add a new clause 9A as follows:

9A. FLASHING DEVICES. Lampholder adaptors incorporating an automatic interrupting or flashing device shall function satisfactorily when a lamp of its marked rating is inserted, and shall not fail in any way leading to fire or shock hazard when a bayonet cap lamp of highest rating permitted under Part I of the SAA Wiring Rules is inserted, or when a short circuit is applied at the output side of the accessory. AMDT. No. 2 MARCH 1963

This amendment forms part of the specification on 1 April 1963.

Appendix A, DIMENSIONS OF BAYONET CAP PORTION.

Table A–1, Normal Bayonet Lampholder Adaptors. AMDT. No. 2 MARCH 1963

For dimension F, *indicate* existing dimensions 0.091 in (2.3 mm) as minimum dimensions, and *include* 0.106 in (2.7 mm) as maximum dimensions.

This amendment forms part of the specification on 1 April 1963.

PROPERTY OF THE
LIBRARY OF CONGRESS

X-T59.S7 # 133

Amendment No. 3
March 1963

STANDARDS ASSOCIATION OF AUSTRALIA
Incorporated by Royal Charter

AMENDMENT No. 3
to
SAA Approval and Test Specification
for
EXTRA-LOW VOLTAGE TRANSFORMERS
(AS C126—1958 Ap.)

The 1958 edition of AS C126 Ap., which was previously amended in 1962 (twice), is further amended as follows; the amendment should be inserted at the appropriate places.

Clause 1, SCOPE.

Include the following "note":

NOTE. Attention is drawn to AS CZ9, Minimising of Anaesthetic Fire and Explosion Hazards in Hospitals, which includes particular requirements for extra-low voltage transformers intended for use in hospitals.

This amendment forms part of the specification on 1 April 1963.

Amendment No. 1
March 1963

STANDARDS ASSOCIATION OF AUSTRALIA
Incorporated by Royal Charter

X-T59
.S7 #134

AMENDMENT No. 1

to

SAA Approval and Test Specification

for

BUSWAYS
(AS C151—1960 Ap.)

The 1960 edition of AS C151 Ap. is amended as follows; the amendments should be inserted at the appropriate places.

Clause 4, CLASSIFICATION OF BUSWAYS.

Delete item (v) from the second paragraph. AMDT. No. 1 MARCH 1963

This amendment forms part of the specification on 1 April 1963.

Clause 12, CONNECTIONS TO BUSWAYS.

Delete the last paragraph and *substitute:*

Take-off boxes or plug-in devices intended to supply circuits rated at not more than 15 amperes shall be provided with entry, connecting and anchorage facilities complying with A. & T.S. C100 for flexible cords of appropriate rating. AMDT. No. 1 MARCH 1963

This amendment forms part of the specification on 1 April 1964.

Appendix A-2, APPLICATION OF TABLES A-1 AND A-2.

Alter the diagrams so that in each case the four conductors are of the same size and shape. AMDT. No. 1 MARCH 1963

Insert the following new second paragraph immediately below the diagrams:

Where neutral conductors of smaller size than the active conductors are used, the spacing of the supports for the neutral conductor should be based on the dimensions of the neutral conductor itself.

This amendment forms part of the specification on 1 April 1963.

PROPERTY OF THE
LIBRARY OF CONGRESS

Amendment No. 5
March 1963

STANDARDS ASSOCIATION OF AUSTRALIA
Incorporated by Royal Charter

X-T59
.S7#135

AMENDMENT No. 5

to

SAA Approval and Test Specification

for

VACUUM CLEANERS
(AS C153—1951 Ap.)

The 1951 edition of AS C153 Ap., which was previously amended in 1959, 1961 (twice) and 1962, is further amended as follows; the amendments should be inserted at the appropriate places.

Clause 5, EARTHING FACILITIES.

Delete the second and third lines of the new paragraph (Amendment No. 4, October 1962) and *substitute:*

"exposed metal parts shall not exceed 1 ohm for readily accessible rotating exposed metal parts and 0.1 ohm in all other cases." AMDT. No. 5 MARCH 1963

This amendment forms part of the specification on 1 April 1963.

Clause 15 (d), TESTS—Test of Earthing Facilities.

Delete the words after the parenthesis in the last line and *substitute:*

"and shall comply with the requirements of Clause 5 herein." AMDT. No. 5 MARCH 1963

This amendment forms part of the specification on 1 April 1963.

PROPERTY OF THE
LIBRARY OF CONGRESS

Amendment No. 6
March 1963

X-T59
.S7 #136

STANDARDS ASSOCIATION OF AUSTRALIA
Incorporated by Royal Charter

AMENDMENT No. 6

to

SAA Approval and Test Specification

for

ELECTRIC LAWNMOWERS
(AS C156—1955 Ap.)

The 1955 edition of AS C156 Ap., which was previously amended in 1958 (twice), 1959, 1961 and 1962, is further amended as follows; the amendments should be inserted at the appropriate places.

Clause 13, EARTHING FACILITIES.

Delete the last paragraph and *substitute* the following:

The resistance between the earthing contact and any exposed metal parts shall not exceed 1 ohm for readily accessible rotating exposed metal parts and 0.1 ohm in all other cases. AMDT. No. 6 MARCH 1963

This amendment forms part of the specification on 1 April 1963.

Clause 16 (c), AUXILIARY EQUIPMENT—TRANSFORMERS.

Delete sub-clause (c). AMDT. No. 6 MARCH 1963

This amendment forms part of the specification on 1 April 1963.

Clause 18 (d), TESTS—EARTHING FACILITIES.

Delete existing sub-clause and *substitute:*

(d) Earthing Facilities. The resistance between the earthing contact and any exposed metal parts shall be measured in the manner specified in Clause 123 of AS C100 Ap. and shall comply with the requirements of Clause 13 herein. AMDT. No. 6 MARCH 1963

This amendment forms part of the specification on 1 April 1963.

PROPERTY OF THE
LIBRARY OF CONGRESS

Amendment No. 5
March 1963

STANDARDS ASSOCIATION OF AUSTRALIA
Incorporated by Royal Charter

X-T59
.S7 #137

AMENDMENT No. 5

to

SAA Approval and Test Specification

for

ELECTRIC FLOOR POLISHERS
(AS C157—1956 Ap.)

The 1956 edition of AS C157 Ap., which was previously amended in 1959, 1961 and 1962 (twice), is further amended as follows; the amendments should be inserted at the appropriate places.

Clause 5, FLOOR POLISHERS WITH EARTHING FACILITIES.

Add the following further sentence to the first paragraph:

Where the earthing facility is located on the base of the floor polisher, earthing continuity from the base to the operating handle or frame of the upper portion of the floor polisher may be effected through a hinged joint. AMDT. No. 5 MARCH 1963

Delete the last paragraph and *substitute:*

The resistance between the earthing contact and any exposed metal parts shall not exceed 1 ohm for readily accessible rotating exposed metal parts and 0.1 ohm in all other cases.

This amendment forms part of the specification on 1 April 1963.

Clause 7 (b), FLEXIBLE CORD—Protection.

Add the following to the last sentence of the first paragraph:

". . . and shall not be an integral part of the supply flexible cord." AMDT. No. 5 MARCH 1963

This amendment forms part of the specification on 1 April 1963.

PROPERTY OF THE
LIBRARY OF CONGRESS

Amendment No. 3
March 1963

STANDARDS ASSOCIATION OF AUSTRALIA
Incorporated by Royal Charter

X-T59
.S7 #138

AMENDMENT No. 3

to

SAA Approval and Test Specification

for

PORTABLE ELECTRIC DRILLS (AS C160—1959 Ap.)

The 1959 edition of AS C160 Ap., which was previously amended in 1961 and 1962, is further amended as follows; the amendments should be inserted at the appropriate places.

Clause 5 (b), FLEXIBLE CORD—PROTECTION.

Add the following to the last sentence:

"and shall not be an integral part of the supply flexible cord." AMDT. No. 3 MARCH 1963

This amendment forms part of the specification on 1 April 1963.

Clause 7, ELECTRIC DRILLS WITH EARTHING FACILITIES.

Delete the last paragraph and *substitute:*

The resistance between the earthing contact and any exposed metal parts shall not exceed 1 ohm for readily accessible rotating exposed metal parts and 0.1 ohm in all other cases. AMDT. No. 3 MARCH 1963

This amendment forms part of the specification on 1 April 1963.

Clause 16 (e), TESTS—TEST OF EARTHING FACILITIES.

Delete existing sub-clause and *substitute:*

(e) Test of Earthing Facilities. The resistance between the earth pin of the plug and exposed metal parts of the drill shall be measured in the manner specified in AS C100 Ap. (Clause 123, Earthing Facilities) and shall comply wtih the requirements of Clause 7 herein. AMDT. No. 3 MARCH 1963

This amendment forms part of the specification on 1 April 1963.

PROPERTY OF THE
LIBRARY OF CONGRESS

Amendment No. 1
March 1963

X-T59
.S7#137

STANDARDS ASSOCIATION OF AUSTRALIA
Incorporated by Royal Charter

AMENDMENT No. 1

to

SAA Approval and Test Specification

for

DOMESTIC ELECTRIC FOOD MIXERS
(AS C162—1960 Ap.)

The 1960 edition of AS C162 Ap. is amended as follows; the amendments should be inserted at the appropriate places.

Clause 5, FOOD MIXERS WITH EARTHING FACILITIES.

Delete the last paragraph and *substitute:*

The resistance between the earthing contact and any exposed metal parts shall not exceed 1 ohm for readily accessible rotating exposed metal parts and 0.1 ohm in all other cases. AMDT. No. 1 MARCH 1963

This amendment forms part of the specification on 1 April 1963.

Clause 15 (e), TESTS—TESTING OF EARTHING FACILITIES.

Delete existing sub-clause and *substitute:*

(e) Testing of Earthing Facilities. The resistance between the earthing contact and any exposed metal parts shall be measured in the manner specified in Clause 123 of AS C100 Ap. and shall comply with the requirements of Clause 5 herein. AMDT. No. 1 MARCH 1963

This amendment forms part of the specification on 1 April 1963.

PROPERTY OF THE

X-T59
.S7 #140
2B Cataloging
Subj. Cat. Div.

Amendment No. 1
April 1963

STANDARDS ASSOCIATION OF AUSTRALIA

Incorporated by Royal Charter

2 - AUG 1
in Copy 0 196

AMENDMENT No. 1

to

AS B91—1951, Protective Filters against Harmful Radiations in Welding and Allied Operations

and

AS B99—1951, Helmets, Handshields, Face Masks and Goggles for Protection against Harmful Radiations in Welding and Allied Operations.

The above standards are amended as follows; the amendments should be made to the clauses indicated.

AS B91.

Clause 2-2, DIMENSIONS.

Amend "0.078 in." to read "0.050 in". AMDT. No. 1 APRIL 1963

Clause 3-2, DIMENSIONS.

Amend "0.078 in." to read "0.050 in".

AS B99.

Clause 2-4, MOUNTING OF FILTERS AND COVER GLASSES IN HELMETS. AMDT. No. 1 APRIL 1963

Amend "0.128 in." to read "0.100 in".

Clause 3-4, MOUNTING OF FILTER AND COVER GLASSES IN HANDSHIELDS.

Amend "0.128 in." to read "0.100 in".

Clause 4-4, MOUNTING OF FILTER AND COVER GLASSES IN FACE MASKS.

In paragraphs 1 and 2, *amend* "0.128 in." to read "0.100 in".

Clause 5-5, MOUNTING OF FILTER AND COVER GLASSES IN EYECUP GOGGLES.

Amend "0.128 in." to read "0.100 in".

X-T59
.S7 #141

AUSTRALIAN STANDARDS K144 and CK8—1963

(UDC 621.357.7:669.587:669.1)

2-SEP 5
Copy 1963

ELECTROPLATED COATINGS OF ZINC ON IRON AND STEEL

PROPERTY OF THE
LIBRARY OF CONGRESS

Incorporated by Royal Charter

STANDARDS ASSOCIATION OF AUSTRALIA

X-T59
.S7 #142

AUSTRALIAN STANDARD A125—1963

(UDC 621.643.2:669.14 — 462.2)

2-SEP 5
Copy 1963

ARC WELDED STEEL PIPES

FOR WATER AND GAS

PROPERTY OF THE
LIBRARY OF CONGRESS

Incorporated by Royal Charter

STANDARDS ASSOCIATION OF AUSTRALIA

X-T59
.S7 #143

AUSTRALIAN STANDARD Z4—1963

(UDC 614.896)

X-T59
.S7

2-SEP 5
Copy ___ 1963

INDUSTRIAL SAFETY GLOVES AND MITTENS

PROPERTY OF THE
LIBRARY OF CONGRESS

Incorporated by Royal Charter

STANDARDS ASSOCIATION OF AUSTRALIA

2 B Cataloging,
Subj. Cat. Sec.
X-T59
.S7
#144

AUSTRALIAN STANDARD A136—1963

(UDC 625.748:624.012.3:628.26)

2-SEP 2 5
Copy 2 1963

PRECAST REINFORCED CONCRETE BOX CULVERTS

PROPERTY OF THE
LIBRARY OF CONGRESS

Incorporated by Royal Charter

STANDARDS ASSOCIATION OF AUSTRALIA

X-155
.S7
X-750

AUSTRALIAN STANDARD C344—1953

FIXED CARBON COMPOSITION RESISTORS

TYPE II—NORMAL STABILITY

PROPERTY OF THE
LIBRARY OF CONGRESS

Incorporated by
Royal Charter

STANDARDS ASSOCIATION OF AUSTRALIA

2B Cataloging
Subj. Cat. Div
S

AUSTRALIAN STANDARD K125—1963

(UDC 621.643.2:678.742.3)

X-T59
.S7 #1460

2-AUG 13
Copy e 1963

POLYETHYLENE (POLYTHENE) PIPE EXTRUSION COMPOUNDS

PROPERTY OF THE
LIBRARY OF CONGRESS

Incorporated by Royal Charter STANDARDS ASSOCIATION OF AUSTRALIA

2B Cataloging
Subj. Cat. Div.

AUSTRALIAN STANDARD N42 - 1963

(UDC 621.798.12:676.7)

X-T59
.S7 #147

2 - AUG 13
Copy 2 1963

CORRUGATED FIBREBOARD CONTAINERS FOR DRIED VINE FRUIT

PROPERTY OF THE
LIBRARY OF CONGRESS

Incorporated by Royal Charter

STANDARDS ASSOCIATION OF AUSTRALIA

X-T59
.S7
#148

AUSTRALIAN STANDARD Z21—1963
(UDC 621.798.1:614.8)

PLASTICS CONTAINERS FOR POISONOUS SUBSTANCES

PROPERTY OF THE
LIBRARY OF CONGRESS

STANDARDS ASSOCIATION OF AUSTRALIA
Incorporated by Royal Charter

X-T59
.S7
#149
X-T59
.S7

AUSTRALIAN STANDARD O27—1963

(UDC 674.03:625.1)

2 COPY
DEC 13
1963

RAIL TRACK SLEEPERS
LEAD OR CROSSING TIMBERS
BRIDGE TRANSOMS
FROM EASTERN AUSTRALIAN HARDWOODS

STANDARDS ASSOCIATION OF AUSTRALIA
Incorporated by Royal Charter

X-T59
.S7 #59

AUSTRALIAN STANDARD N47 – 1963

(UDC 637.33)

2 - OCT. 8
Copy
1963

RECTANGULAR CHEESE HOOPS

PROPERTY OF THE
LIBRARY OF CONGRESS

STANDARDS ASSOCIATION OF AUSTRALIA

Incorporated by Royal Charter

X-T59
.S7 #151

AUSTRALIAN STANDARD 080 — 1963

(UDC 674.03:624.21.09:627.33)

2 - DEC 19
COPY
1963

DECKING TIMBER

FROM

EASTERN AND SOUTH-EASTERN AUSTRALIAN

HARDWOODS

PROPERTY OF THE
LIBRARY OF CONGRESS

STANDARDS ASSOCIATION OF AUSTRALIA

Incorporated by Royal Charter

2B Cataloging
Subj. Cat. Div.
X-T59
.S7 #152

AUSTRALIAN STANDARD H53 — 1963

(UDC 669.71-426)

5 - JUL - 1
Copy 2 1963

WROUGHT ALUMINIUM AND ALUMINIUM ALLOY DRAWN WIRE

FOR GENERAL ENGINEERING PURPOSES

PROPERTY OF THE
LIBRARY OF CONGRESS

Incorporated by Royal Charter

STANDARDS ASSOCIATION OF AUSTRALIA

X-T59
.S7 #63

AS C168—1963 Ap.
(UDC 621.312:621.327.43)

2 - DEC 13
Copy 1963

SAA
Approval and Test Specification
for
FLUORESCENT LAMP BALLASTS

PROPERTY OF THE
LIBRARY OF CONGRESS

STANDARDS ASSOCIATION AUSTRALIA
Incorporated by Royal Charter

PUBLISHED BY THE STANDARDS ASSOCIATION OF AUSTRALIA, 157 GLOUCESTER STREET, SYDNEY
(COPYRIGHT)

X-T59
.S7 #154

AUSTRALIAN STANDARD K111—1963

(UDC 667.633)

2 - DEC 1963
Copy

OIL GLOSS PAINT

FOR GENERAL USE

PROPERTY OF THE
LIBRARY OF CONGRESS

Incorporated by Royal Charter

STANDARDS ASSOCIATION OF AUSTRALIA

X-159
.S7 #155

AUSTRALIAN STANDARD K108—1963

(UDC 667.633)

2 - DEC .3
Copy — 1963

METAL PRIMING PAINT

ANTI-CORROSIVE

PROPERTY OF THE
LIBRARY OF CONGRESS

Incorporated by Royal Charter

STANDARDS ASSOCIATION OF AUSTRALIA

X-T59
.S7 #156

AUSTRALIAN STANDARD N44—1963

(UDC 632.951)

2 - FEB 19
COPY 1963

LIME, LIME-SULPHUR AND SULPHUR

FOR USE AS AGRICULTURAL PESTICIDES

PROPERTY OF THE
LIBRARY OF CONGRESS

Incorporated by Royal Charter STANDARDS ASSOCIATION OF AUSTRALIA

X-T59
.S7 #157 S

AUSTRALIAN STANDARD A87—1963

(UDC 666.977:691.327-431)

5 JUL - 1
Copy 1963

CONCRETE BLOCKS FOR MASONRY CONSTRUCTION

PROPERTY OF THE
LIBRARY OF CONGRESS

Incorporated by Royal Charter STANDARDS ASSOCIATION OF AUSTRALIA

X-T59
.S7 #158

AUSTRALIAN STANDARD C75, Part I—1963
(UDC 621.315.53:669.71)

5 - JUL - 1
Copy 2. 1963

ALUMINIUM CONDUCTORS STEEL REINFORCED

FOR OVERHEAD POWER TRANSMISSION PURPOSES

PROPERTY OF THE
LIBRARY OF CONGRESS

Incorporated by Royal Charter
STANDARDS ASSOCIATION OF AUSTRALIA

X-T39
.S7 1957

AUSTRALIAN STANDARD 2426-1963

VERIFICATION OF TESTING MACHINES

PROPERTY OF THE
LIBRARY OF CONGRESS

Incorporated by Royal Charter STANDARDS ASSOCIATION OF AUSTRALIA

X-T59
.S7 #160 S

AUSTRALIAN STANDARD L25 – 1963

(UDC 677.21.064)

5
Copy

COTTON DUCK

Incorporated by
Royal Charter

STANDARDS ASSOCIATION OF AUSTRALIA

S

AUSTRALIAN STANDARD A123—1963

(UDC 666.971:693.2)

X-T59
.S7 #161

55 JUL-1
Copy 2 1963

MORTAR

FOR

MASONRY CONSTRUCTION

PROPERTY OF
LIBRARY OF CONGRESS

Incorporated by Royal Charter

STANDARDS ASSOCIATION OF AUSTRALIA

S

AUSTRALIAN STANDARD A43—1963

[UDC 666.81:691.65]

X-T59
.S7 #162

5 JUL - 1
Copy 2 1963

GYPSUM PLASTER FOR BUILDING PURPOSES

PROPERTY OF THE
LIBRARY OF CONGRESS

Incorporated by Royal Charter

STANDARDS ASSOCIATION OF AUSTRALIA

X-T59
.S7 #163

AUSTRALIAN STANDARD N39 – 1963

(UDC 621.643.3:678.743.22)

2-APR 18
Copy 1963

PVC GARDEN HOSE

PROPERTY OF THE
LIBRARY OF CONGRESS

Incorporated by
Royal Charter

STANDARDS ASSOCIATION OF AUSTRALIA

X-T59
.S7 #169

AUSTRALIAN STANDARD N30—1963

(UDC 632.951:661.8)

2-APR 18
Copy ____ 1963

CYANIDE
PEST DESTROYERS

PROPERTY OF THE
LIBRARY OF CONGRESS

Incorporated by
Royal Charter

STANDARDS ASSOCIATION OF AUSTRALIA

LC Cataloging
Subj. Cat. Div.

AUSTRALIAN STANDARD A2 - 1963
(UDC 666.942)

X-T59
.S7 #165

2 - AUG 13
Copy 1963

PORTLAND CEMENT

PROPERTY OF THE
LIBRARY OF CONGRESS

Incorporated by
Royal Charter

STANDARDS ASSOCIATION OF AUSTRALIA

X-T59
.S7 #166

AUSTRALIAN STANDARD Z18—1963

(UDC 614.894)

2-SEP 5
Copy 1963

RESPIRATORY PROTECTIVE DEVICES

PROPERTY OF THE
LIBRARY OF CONGRESS

Incorporated by Royal Charter STANDARDS ASSOCIATION OF AUSTRALIA

X-T59
.S7#167

AUSTRALIAN STANDARD C337—1963
(UDC 621.315.6)

2-SEP 25
Copy 1963

INSULATION CO-ORDINATION

PROPERTY OF THE
LIBRARY OF CONGRESS

Incorporated by Royal Charter STANDARDS ASSOCIATION OF AUSTRALIA

X-T59
.S7

AUSTRALIAN STANDARD C67—1963
(UDC 621.315.62:666)

5 - JUL - 1
Copy 1963

PORCELAIN AND GLASS INSULATORS FOR OVERHEAD POWER LINES

Incorporated by Royal Charter

STANDARDS ASSOCIATION OF AUSTRALIA

X-T59
.S7 #169

AUSTRALIAN STANDARD C333—1963

(UDC 621.39:620.16)

5 - JUL - 1
Copy 2 1963

CLIMATIC AND DURABILITY TESTS FOR ELECTRONIC EQUIPMENT COMPONENTS

PROPERTY OF THE
LIBRARY OF CONGRESS

Incorporated by
Royal Charter STANDARDS ASSOCIATION OF AUSTRALIA

X-T59
.S7#170

AUSTRALIAN STANDARD CA32 — 1963

(UDC 693.28)

5 - JUL - 1
Copy O 1963

SAA CODE FOR CONCRETE BLOCK MASONRY

JUL - 3
PROPERTY OF THE
LIBRARY OF CONGRESS

Incorporated by Royal Charter

STANDARDS ASSOCIATION OF AUSTRALIA

Miniature

March 1963

STANDARDS ASSOCIATION OF AUSTRALIA

Incorporated by Royal Charter

X-T59
.S7 #171

CORRIGENDUM

to

AS CA33—1962

CODE OF RECOMMENDED PRACTICE FOR CONCRETE PIPE LAYING DESIGN

In Fig. 1 the curves are incorrectly designated. Reading from top to bottom the curves should be designated in the sequence—

Curve A, Curve B, Curve C, Curve D and Curve E.

The designation in the legend remains unaltered.

X-T59
.S7
#172

AUSTRALIAN STANDARD K109—1963

(UDC 667.633)

X-T59
.S7

2 - DEC 1963
Copy

WOOD PRIMING PAINT

OIL BASE

PROPERTY OF THE
LIBRARY OF CONGRESS

Incorporated by Royal Charter

STANDARDS ASSOCIATION OF AUSTRALIA

X-T59
.S7 #173

AUSTRALIAN STANDARD L19—1964

(UDC 677.01:531.71)

2 MAR 22
Copy 1965

DETERMINATION OF LENGTH OF WOVEN TEXTILE FABRICS

STANDARDS ASSOCIATION AUSTRALIA
Incorporated by Royal Charter

PUBLISHED BY THE STANDARDS ASSOCIATION OF AUSTRALIA, 157 GLOUCESTER STREET, SYDNEY
(COPYRIGHT)

X-T59

AS C177—1964 Ap.
(Supplementary Series)

STANDARDS ASSOCIATION OF AUSTRALIA

Approval and Test Specification for UNPROTECTED PVC-ASBESTOS AND PVC-GLASS HEAT-RESISTING FLEXIBLE CORDS

(Supplementary Series)

INTRODUCTION

This specification, prepared by Committee EL/3, Electric Wires and Cables, was approved on behalf of the Council of the Standards Association of Australia on 23 September 1964.

It is one of a supplementary series of approval and test specifications issued under Part II of the SAA Wiring Rules. The purpose of the relatively brief specifications in this supplementary series is to deal with materials and equipment for which no full individual approval and test specification is yet available but for which some requirements are necessary for the purpose of the SAA Wiring Rules. These supplementary specifications are of an interim nature and will in due course be expanded and issued as full approval and test specifications.

The specification is based on the Canadian Standard C22.2 No. 28—1960, Construction and Test of All-Asbestos, Asbestos-Varnished-Cloth and Asbestos-Thermoplastic Insulated Wires and Cables, Type A-22. The Canadian Standard has been modified to follow well established local practices in some respects. In particular, provision has been made for the outer layer of insulation to be of either glass or asbestos in accordance with AS C158 Ap., Heat-resisting, Fibrous-insulated Cables and Flexible Cords.

The specification is to be read in conjunction with AS C100 Ap., Definitions and General Requirements for Electrical Materials and Equipment, and requires reference to AS C147 Ap., PVC-insulated Cables and Flexible Cords, C158 Ap., and C347, PVC Insulation of Electric Cables and Flexible Cords.

X-T59
.S7 #175

AUSTRALIAN STANDARD L15, Part XVII—1964

2=MAR 22
Copy ___ 1965

METHODS
FOR DETERMINING THE
COLOUR FASTNESS OF TEXTILES

PART XVII, COLOUR FASTNESS TO PERSPIRATION

STANDARDS ASSOCIATION OF AUSTRALIA
Incorporated by Royal Charter

PUBLISHED BY THE STANDARDS ASSOCIATION OF AUSTRALIA
157 GLOUCESTER STREET, SYDNEY (Copyright)

X-795.5
#176

AUSTRALIAN STANDARD L15, Part XVIII—1964

2=MAR22
Copy 1965

METHODS
FOR DETERMINING THE
COLOUR FASTNESS OF TEXTILES

PART XVIII, COLOUR FASTNESS TO AMMONIUM THIOGLYCOLLATE

Incorporated by Royal Charter

PUBLISHED BY THE STANDARDS ASSOCIATION OF AUSTRALIA
157 GLOUCESTER STREET, SYDNEY (Copyright)

X-T59
.57 #177

Amendment No. 1
October 1964

STANDARDS ASSOCIATION OF AUSTRALIA
(Incorporated by Royal Charter)

2 MAR 1965
Copy

AMENDMENT No. 1
to
AS K53—1960
METHODS FOR TESTING ZINC COATING ON HOT DIP GALVANISED ARTICLES

PART II WIRES

Page 8. **Clause 2-1, SCOPE OF PART.**

Delete "including fencing wire, wire for the manufacture of barbed wire, and on wire netting and manufactured barbed wire." AMDT. No. 1 OCT. 1964

Page 8. **SELECTION AND PREPARATION OF SAMPLES.**

Delete "SAMPLES" and *substitute* "TEST SPECIMENS".

Page 8. **Clause 2-2, FENCING WIRE, WIRE FOR FABRICATED PRODUCTS (INCLUDING BARBED WIRE).**

Delete clause title and *substitute:* "WIRE, OTHER THAN WIRE NETTING AND MANUFACTURED BARBED WIRE". AMDT. No. 1 OCT. 1964

Clause 2-2 (a), SAMPLING.

Delete "For other than manufactured barbed wire and wire netting . . ."

Page 11. **Clause 2-6 (b), PROCEDURE.**

Delete the following from first paragraph:

"namely:
A.S. No.
N.1, Galvanised (Zinc-coated) Steel Fencing Wire
N.2, Galvanised (Zinc-coated) Hexagonal Mesh Steel Wire Netting
N.3, Galvanised (Zinc-coated) Wire for the Manufacture of Barbed Wire
B.S.
182-4 Galvanised Iron and Steel Wire for Telegraph and Telephone Purposes
443 Testing of Zinc Coating on Galvanised Wires". AMDT. No. 1 OCT. 1964

Delete last paragraph on page 11 and *substitute:*

"Not more than the following number of specimens shall be immersed in the solution at the one time:
Wires ..... 3 specimens
Wire netting ..... 1 specimen
The wires shall not touch each other." AMDT. No. 1 OCT. 1964

for LB cataloging
subj cat. div.
2-MAR 22
Copy 0 1965
X-T59
.S7#178

Australian Amendment No. 1
November 1964

STANDARDS ASSOCIATION OF AUSTRALIA

Incorporated by Royal Charter

AUSTRALIAN STANDARD B205—1964
GRAPHICAL SYMBOLS FOR USE IN DIAGRAMS FOR FLUID POWER TRANSMISSION AND CONTROL SYSTEMS
(endorsement of B.S. 2917:1957)

British Standard 2917:1957 has been endorsed as an Australian standard subject to Australian amendment. The accompanying endorsement slip is for attachment to the front cover of B.S.2917, the following text is for insertion on the back of the title page, and the amendments are for insertion at the pages indicated.

A proposed standard for graphical symbols for fluid power systems formed portion of submissions made by the Institution of Automotive and Aeronautical Engineers to the Standards Association of Australia for promulgation of standards relating to pneumatic and hydraulic power transmission and control systems for industrial equipment.

The references to pneumatic and hydraulic graphical symbols were coordinated as proposed standard symbols for fluid power systems generally, and were issued by SAA for public review as Doc. 731. The symbols so submitted were drawn from JIC Standards for Hydraulic and Pneumatic Systems but were in fact closely in line with British Standard 2917:1957 and the American Standard Y32.10—1958.

From the distribution of Doc. 731, it emerged that major developments are taking place at the international level in relation to drawing practice for fluid power systems, particularly through ISO/TC10/SC2, which are likely to lead to internationally agreed symbols containing important innovations in comparison with present standards.

On the other hand, emphasis has been placed on an existing need for an Australian standard for graphical symbols for fluid power diagrams, especially for educational purposes. Because the IAAE submissions were in fact substantially identical with B.S.2917:1957, both relating back to JIC standards, it appeared that the spirit of these submissions would be met by endorsement of B.S.2917 as an Australian standard. Consequently, this endorsement is being promulgated in the belief that it will serve a useful purpose in an interim period, but also on the understanding that it will be reviewed when an international recommended practice is established.

In the use of the standard, reference may be made to associated standards, as follows:

AS B204—1964, Glossary of Terms for Fluid Power Transmission and Control Systems.

AS B203—1964, Specification for Pneumatic Systems for Industrial Equipment.

AS B211— , Specification for Hydraulic Systems for Industrial Equipment (in course of preparation).

for AB cataloguing
only, not dist.

X-T59
.59#179

Amendment No. 5
December 1964

STANDARDS ASSOCIATION OF AUSTRALIA
(Incorporated by Royal Charter)

2-MAR 22
Copy 0 1965

AMENDMENT No. 5
to
SAA Approval and Test Specification
for
ELECTRIC FUSES
(AS C135—1958 Ap.)

The 1958 edition of AS C135 Ap. which was previously amended in 1959, 1960, 1961 and 1962 is further amended as follows; the amendments should be inserted at the appropriate places.

Table 1, Categories of Duty.

In the third column of Table 1, *alter* the power factor for AC1 fuses from 0.6 to 0.75. AMDT. No. 5 DEC. 1964

This amendment forms part of the specification on 1 January 1966.

Clause 12 (a), Required Marking.

Add a new item (vii):

(vii) The letter "U" for a.c. semi-enclosed and rewirable cartridge fuses which are intended for mounting immediately adjacent to each other when connected to different polarity or phase. (See Clause 13(e)(i)). AMDT. No. 5 DEC. 1964

This amendment forms part of the specification on 1 January 1966.

Clause 12 (b), Location of Marks.

Add a new paragraph:

For item (vii) the marking of the letter "U" shall be made on the fuse base and shall be so located as to be visible when the base is mounted in position and the fuse carrier is removed. AMDT. No. 5 DEC. 1964

This amendment forms part of the specification on 1 January 1966.

Clause 13 (e), Tests for Duty.

Item (i) Preparation of Fuses for Test for Duty.

Delete existing item (i) and Fig. 1 and *substitute:*

(i) *Preparation of Fuses for Test for Duty.* Fuses that may be used in service in unlined metal cases shall be tested in bare metal cases, having clearance from the fuse parts not greater than the minimum clearance to be used in service. AMDT. No. 5 DEC. 1964

for 2B cataloging
subj cat div

X-T59
57 #180

Amendment No. 1
December 1964

STANDARDS ASSOCIATION OF AUSTRALIA

Incorporated by Royal Charter

2 MAR 22
Copy 0 1965

AMENDMENT No. 1

to

AS K125—1963

POLYETHYLENE (POLYTHENE) PIPE EXTRUSION COMPOUNDS

Clause 2, COMPOSITION.

Delete existing sub-clause (ii) and *substitute:*

(ii) 2.5 ± 0.5 per cent by weight of carbon black when the compound is tested by Method 405A of AS K94. The carbon black shall be of a type complying with the following: AMDT. No. 1 DEC. 1964

Density—1.5-2.0 g/ml
Maximum volatile matter—9.0 per cent
Average particle size—0.010-0.025 micron
Benzene extract—Not more than 0.10 per cent when determined by the method given in Appendix C.

X - T59
.S7 # 81

AUSTRALIAN STANDARD L39—1964

(UDC 677.01:531.717)

2 MAR 22
Copy ___ 1965

DETERMINATION OF WIDTH OF WOVEN TEXTILE FABRICS

Incorporated by Royal Charter

PUBLISHED BY THE STANDARDS ASSOCIATION OF AUSTRALIA, 157 GLOUCESTER STREET, SYDNEY

(COPYRIGHT)

X-T59
.57 #A2

AUSTRALIAN STANDARD L40—1964

(UDC 677.01:531.717)

2 MAR 22
Copy —— 1965

DETERMINATION OF THICKNESS OF WOVEN AND KNITTED TEXTILE FABRICS

Incorporated by Royal Charter

PUBLISHED BY THE STANDARDS ASSOCIATION OF AUSTRALIA, 157 GLOUCESTER STREET, SYDNEY
(COPYRIGHT)

X·T59
.59
#653

AUSTRALIAN STANDARD L23—1964

(UDC 677.01:531.75)

2 MAR 22
Copy 1965

DETERMINATION OF WEIGHT PER UNIT LENGTH AND WEIGHT PER UNIT AREA OF WOVEN TEXTILE FABRICS

Incorporated by Royal Charter

PUBLISHED BY THE STANDARDS ASSOCIATION OF AUSTRALIA, 157 GLOUCESTER STREET, SYDNEY
(COPYRIGHT)

X-T59
.59 #184

AUSTRALIAN STANDARD L15, Part XV—1964

2 MAR 22
Copy ___ 1965

METHODS
FOR DETERMINING THE
COLOUR FASTNESS OF TEXTILES

PART XV, COLOUR FASTNESS TO WASHING

Incorporated by Royal Charter

PUBLISHED BY THE STANDARDS ASSOCIATION OF AUSTRALIA
157 GLOUCESTER STREET, SYDNEY **(Copyright)**

X-T59
.S7 #185

AS C122 — 1964 Ap.

(UDC 621.312:621.316.541)

2 MAR 72
Copy ___ 1965

SAA
Approval and Test Specification
for
PLUG SOCKET ADAPTORS

STANDARDS ASSOCIATION OF AUSTRALIA
Incorporated by Royal Charter

PUBLISHED BY THE STANDARDS ASSOCIATION OF AUSTRALIA, 157 GLOUCESTER STREET, SYDNEY
(COPYRIGHT)

X-T59
.59

AS C142 — 1964 Ap.
(UDC 621.312:621.365:683.97)

2 MAR 65
Copy — 1965

SAA
Approval and Test Specification
for
ELECTRIC WATER HEATERS

Incorporated by Royal Charter

PUBLISHED BY THE STANDARDS ASSOCIATION OF AUSTRALIA, 157 GLOUCESTER STREET, SYDNEY
(COPYRIGHT)

X-T59
.S7#187

AUSTRALIAN STANDARD Z10—1964

(UDC 614.891)

2=MAR 2 8
Copy ____ 1965

INDUSTRIAL SAFETY HELMETS

Incorporated by Royal Charter STANDARDS ASSOCIATION OF AUSTRALIA

X-T59
.57#168

AUSTRALIAN STANDARD B192—1964

(UDC 631.9.025)

2-MAR 23
Copy ____ 1965

SINTERED CARBIDE INSERTS FOR CUTTING TOOLS

Incorporated by Royal Charter STANDARDS ASSOCIATION OF AUSTRALIA

X - T 59
.S7#189

AUSTRALIAN STANDARD C356, Part I — 1964

(UDC 621.791.76.03)

2-MAR 2 2
Copy ____ 1965

RESISTANCE WELDING EQUIPMENT

TRANSFORMERS AND ELECTRICAL PERFORMANCE

Incorporated by Royal Charter STANDARDS ASSOCIATION OF AUSTRALIA

X-T59
.57 #1

AUSTRALIAN STANDARD N53—1964

(UDC 619:636.089)

2 MAR 1965
Copy

TECHNICAL PHENOTHIAZINE

FOR USE AS AN ANTHELMINTIC

Incorporated by Royal Charter STANDARDS ASSOCIATION OF AUSTRALIA

X - T59
.59 #191

AUSTRALIAN STANDARD 01—1964

(UDC 001.4:674)

2-MAR 2
Copy ___ 1965

TERMS USED IN TIMBER STANDARDS

Incorporated by Royal Charter

STANDARDS ASSOCIATION OF AUSTRALIA

X-TS9
.S7 #192

AUSTRALIAN STANDARD L15, Part XVI—1964

2 MAR 22
Copy ____ 1965

METHODS
FOR DETERMINING THE
COLOUR FASTNESS OF TEXTILES

PART XVI, COLOUR FASTNESS TO DRY CLEANING

STANDARDS ASSOCIATION AUSTRALIA
Incorporated by Royal Charter

PUBLISHED BY THE STANDARDS ASSOCIATION OF AUSTRALIA
157 GLOUCESTER STREET, SYDNEY (Copyright)

X-T 59
59#193

AUSTRALIAN STANDARD C323—1965

(UDC 683.97:621.365.4:621.316.91)

2 AUG 26
Copy 1965

THERMOSTATS AND OVER-TEMPERATURE PROTECTIVE DEVICES

FOR AUTOMATIC ELECTRIC STORAGE WATER HEATERS

Incorporated by Royal Charter

STANDARDS ASSOCIATION OF AUSTRALIA

X-T59
.S7#L4

AUSTRALIAN STANDARD L45—1965

(UDC 677.061 : 620.168)

2 AUG 26
Copy 1965

UNIVERSAL YARN COUNT SYSTEM (TEX SYSTEM)

Incorporated by Royal Charter

STANDARDS ASSOCIATION OF AUSTRALIA

X-T57
.57#P5

AUSTRALIAN STANDARD B204—1965

(UDC 801.4 : 621—622 : 621—42)

2 AUG 2 5
Copy ____ 1965

TERMS FOR FLUID POWER TRANSMISSION AND CONTROL SYSTEMS

Incorporated by Royal Charter

STANDARDS ASSOCIATION OF AUSTRALIA

X-T59
.S2#K6

AUSTRALIAN STANDARD CK10-1965

(UDC 620.197:669.5)

2 AUG 26
Copy ___ 1965

FORMATION OF IRIDESCENT CHROMATE PASSIVATION FILMS ON ZINC

Incorporated by Royal Charter

STANDARDS ASSOCIATION OF AUSTRALIA

X-T59
.S7#A7

AUSTRALIAN STANDARD C316—1965

(UDC 683.97:621.365.4)

2 AUG 26
Copy ___ 1965

AUTOMATIC ELECTRIC STORAGE WATER HEATERS

(10 GALLONS CAPACITY AND UPWARDS)

STANDARDS ASSOCIATION OF AUSTRALIA
Incorporated by Royal Charter

X-T59
.57 #178

AUSTRALIAN STANDARD CA41 – 1965

(UDC 666.97.033:621.643.2)

2 AUG 23
Copy ___ 1965

THE CEMENT MORTAR LINING OF STEEL PIPES AND FITTINGS

STANDARDS ASSOCIATION AUSTRALIA
S·A·A
Incorporated by Royal Charter

STANDARDS ASSOCIATION OF AUSTRALIA

λ-T57
.S7#199

AUSTRALIAN STANDARD CC5—1965

(UDC 616-001.3: 621.791.78)

2 AUG 26 1965
Copy

PREVENTION OF ELECTRIC SHOCK TO ARC WELDERS

STANDARDS ASSOCIATION OF AUSTRALIA
Incorporated by Royal Charter

X-T59
.57#200

AUSTRALIAN STANDARD N54—1965

(UDC 621.798.12:674.6:631.576)

2 AUG 26
Copy ____ 1965

WOODEN CONTAINERS FOR BULK DECIDUOUS FRUIT

Incorporated by Royal Charter

STANDARDS ASSOCIATION OF AUSTRALIA

X-T59
.S9#201

AUSTRALIAN STANDARD D5 — 1965

(UDC 621.316.541.1:629.113)

SEVEN-PIN ELECTRICAL CONNECTORS

FOR VEHICLE-TRAILER JUMPER CABLES

2 AUG 26
Copy ___ 1965

STANDARDS ASSOCIATION OF AUSTRALIA
Incorporated by Royal Charter

AUSTRALIAN STANDARD K1, PART 22 — 1965
(UDC 669.1:543:546.73)

X-T59
.59

METHODS FOR THE ANALYSIS
OF IRON AND STEEL

Part 22

COBALT IN IRON AND STEEL

(Photometric Method for Trace Amounts)

STANDARDS ASSOCIATION OF AUSTRALIA
Incorporated by Royal Charter

PUBLISHED BY THE STANDARDS ASSOCIATION
OF AUSTRALIA, 157 GLOUCESTER STREET, SYDNEY
(COPYRIGHT)

X - T59
.S7 #203

Amendment No. 5
May 1965

STANDARDS ASSOCIATION OF AUSTRALIA

Incorporated by Royal Charter

AMENDMENT No. 5

to

AS CA16—1962

AUTOMATIC SPRINKLER INSTALLATIONS

Page 49. **SR110.**

Delete existing Supplementary Regulation 110 and *substitute:*

17(*e*) 110 **Welded Joints may be used** in pipes of all sizes, but no oxy-acetylene or electric arc cutting and/or welding operations shall be carried on in connection therewith in any risk in which the automatic sprinkler system is being installed, extended, altered, or repaired, unless the provisions of Australian Standard CB19—1963, Australian Standard Rules for Fire Precautions in Arc or Flame Cutting and Arc or Gas Welding Operations, published by the Standards Association of Australia (together with any subsequent amendment thereto) are duly observed. AMDT. No. 5 MAY 1965

Page 50. **SR103.**

Delete existing Supplementary Regulation 103 and *substitute:*

103 **Electrical Installations.**

Sprinkler pipes shall not be used as a **means of earthing** the exposed metal of an electrical installation or even as a link in the earthing system of an installation. They may, however, be bonded to the earthing system of the electrical installation, provided such bonding is made in accordance with the provisions of the Electrical Wiring Rules of the Standards Association of Australia, AS CC1 SAA Wiring Rules Part 1 (except that in Victoria the Wiring Regulations of the State Electricity Commission of Victoria shall apply), and is made in an accessible position, as close as practicable to the origin of the sprinkler system and to the main switchboard of the electrical installation. AMDT. No. 5 MAY 1965

Page 46. **SR108.1.** *Add* "Zoological Gardens" to list.

Page 51. **SR105.** *Add* "Fire Fog" and "Viking" systems to list. AMDT. No. 5 MAY 1965

X-T59
.57ACC4

June 1965

STANDARDS ASSOCIATION OF AUSTRALIA

Incorporated by Royal Charter

CORRIGENDUM

to

AS CC5—1965

PREVENTION OF ELECTRIC SHOCK TO ARC WELDERS

Page 18. *Delete* Fig. B1 and *substitute:*

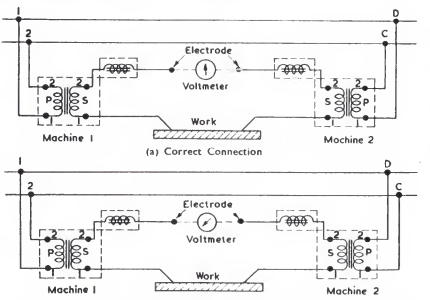

NOTE: Supply connections 1 and 2 are either active and neutral respectively of a single-phase supply, or two phases of a three-phase supply, depending on the voltage for which the machines are designed.

Fig. B1. TWO-WIRE A.C. SUPPLY

X-T59
.59 #705

Amendment No. 1
June 1965

STANDARDS ASSOCIATION OF AUSTRALIA
Incorporated by Royal Charter

AUSTRALIAN AMENDMENT No. 1
to
AS Z23—1965
GLOSSARY OF TERMS RELATING TO THE PERFORMANCE OF MEASURING INSTRUMENTS

Term 103 (Page 12)	*Replace* with new definition as follows: **Recording instrument.** A measuring instrument in which the values of the measured quantity are recorded on a chart or other suitable medium.	AUST. AMDT. No. 1 JUNE 1965
Term 201 (Page 12)	*Amend* Note to read as follows: Calibration provides, typically, a chart giving the values of the measured quantities in terms of the established scale of the instrument.	AUST. AMDT. No. 1 JUNE 1965
Term 302 (Page 13)	*Replace* the title of this term by **"Sensitiveness"** and *delete* the first sentence of the definition.	AUST. AMDT. No. 1 JUNE 1965
Term 303 (Page 13)	*Add* the term **"Response Time"** as an alternative.	AUST. AMDT No. 1 JUNE 1965
Term 308 (Page 13)	*Add* further permissible title of **"Accuracy Class"** below existing title.	AUST. AMDT No. 1 JUNE 1965

Miniature

X-T59
.57 #200

Amendment No. 1
June 1965

STANDARDS ASSOCIATION OF AUSTRALIA
Incorporated by Royal Charter

AMENDMENT No. 1

to

SAA Interim 350

MINIMUM DESIGN LOADS ON BUILDINGS

Page 5. **TABLE 1, WEIGHTS OF MATERIALS.**

AMDT. No. 1 JUNE 1965

Under "ROOFS", *delete* existing weight (18 lb per sq ft) for concrete tiles and *substitute* "11 lb per sq ft".

Miniature

X-T58
.S7 #207

June 1965

STANDARDS ASSOCIATION OF AUSTRALIA

Incorporated by Royal Charter

CORRIGENDUM

to

SAA Approval and Test Specification

for

DOMESTIC ELECTRIC WASHING MACHINES

(AS C163—1960 Ap.)

Clause 18, TESTS.

In accordance with Amendment No. 4, April, 1965, a new sub-clause (m), Test of Automatic Safeguard, was added. This is to be corrected to read sub-clause (n).

Miniature

X-T 59
.59

June 1965

#208

STANDARDS ASSOCIATION OF AUSTRALIA

Incorporated by Royal Charter

CORRIGENDUM

to

SAA Approval and Test Specification

for

BUSWAYS

(AS C151—1960 Ap.)

Clause 14(d) Testing—Temperature During Normal Operation.

Delete first two lines of fifth paragraph and *substitute:*

In respect of the busbars, the maximum temperature shall not exceed 75°C when referred to an ambient temperature of 25°C.

Miniature

X - T57

Endorsement June 1965

BRITISH STANDARD 919 : PART 4 : 1964 #209

is endorsed as

AUSTRALIAN STANDARD
B121, Part 4-1965

without Australian amendment

This endorsement was recommended by Committee ME/10/S, Screw Threads, and was approved on behalf of the Council of the Association on 28 June 1965.

STANDARDS ASSOCIATION OF AUSTRALIA
Science House, 157 Gloucester Street, Sydney

Miniature

X-T59
-97
#210

Endorsement

June 1965

BRITISH STANDARD 545 : 1949

is endorsed as

AUSTRALIAN STANDARD B62-1965

without Australian amendment

This endorsement supersedes AS B62-1936 which was B.S. 545 : 1934 endorsed. It was recommended by Committee ME/11, Gears and Splines, and was approved on behalf of the Council of the Association on 28 June 1965.

STANDARDS ASSOCIATION OF AUSTRALIA
Science House, 157 Gloucester Street, Sydney

Miniature

X - 759
, 59

Endorsement

June 1965

BRITISH STANDARD 2643 : 1955 #211

is endorsed as

AUSTRALIAN STANDARD Z23-1965

subject to Australian Amendment No. 1

This endorsement was recommended by Committee ME/9/L, Metrology, and was approved on behalf of the Council of the Association on 28 June 1965.

STANDARDS ASSOCIATION OF AUSTRALIA
Science House, 157 Gloucester Street, Sydney

X-T57
.57 #22

AUSTRALIAN STANDARD K1, PART 21 — 1965
(UDC 669.1:543:546.73)

2 - APR 30
Copy ____ 1965

METHODS FOR THE ANALYSIS
OF IRON AND STEEL

Part 21
COBALT IN IRON AND STEEL

(Photometric Method)

STANDARDS ASSOCIATION AUSTRALIA
Incorporated by Royal Charter

PUBLISHED BY THE STANDARDS ASSOCIATION OF AUSTRALIA, 157 GLOUCESTER STREET, SYDNEY
(COPYRIGHT)

2 B Catalogue, Subj. Cat. Div.

2 - SEP - 6
Copy 1967

X

#213

Amen

STANDARDS ASSOCIATION OF AUSTRALIA

Incorporated by Royal Charter

AUSTRALIAN AMENDMENT No. 1

to

AS B47—1958

PARALLEL SCREW THREADS OF WHITWORTH FORM

Insert the following in prominent position in standard:

OBSOLESCENT SCREW THREADS

The change to ISO Screw Threads is progressing rapidly througho the world and the Standards Association of Australia considers necessary to insert a relevant note in each standard which specifi obsolescent screw threads.

The British Standards Institution issued an Amendment No. 3 t B.S. 84 (PD 5902) in August 1966, in which strong recommendatio for the use of ISO Screw Threads are made.

The SAA wishes to emphasize that screw threads specified in th standard are obsolescent and should not be used for new or revise designs. *Wherever possible ISO Screw Threads should be used.*

The SAA Committee on Screw Threads realizes, however, that BS\ and BSF threads are still very widely used and that their use can b expected to diminish only gradually during the transition period th may occupy ten years or so. Accordingly, this standard will be neede throughout the transition period.

In due course, when these threads become obsolete, the standar will be withdrawn.

2 B Cataloging, Subj Cat. Div

Amendment No. 1
May 1967

STANDARDS ASSOCIATION OF AUSTRALIA
Incorporated by Royal Charter

X-759
2-SEP-6
Copy d 1967
#214

AUSTRALIAN AMENDMENT No. 1
to
AS B80—1967
DIAL GAUGES FOR LINEAR MEASUREMENT

Page 5. **Title.**
Add an asterisk (*) to the word "measurement" in the heading, and the following footnote at the bottom of the page:
* For lever-type dial test indicators see AS B166.
AUST. AMDT No. 1 MAY 1967

Page 6. *Discrimination.*
Substitute "Sensitiveness" for *"Discrimination"*.
Delete "The sensitiveness of an instrument".
AUST. AMDT No. 1 MAY 1967

Page 9. Clause 10c. *Discrimination.*
Substitute "Sensitiveness" for *"Discrimination"*.
AUST. AMDT No. 1 MAY 1967

Page 10. 3rd line from top.
Substitute "Sensitiveness" for *"Discrimination"*.
AUST. AMDT No. 1 MAY 1967

Page 13. **Fig. 5.**
Substitute the attached figure for existing figure.
AUST. AMDT No. 1 MAY 1967

Page 14. **B2, Discrimination.**
Substitute "Sensitiveness" for *"Discrimination"*.

2B Catal
Subj Cat

2 - JUL 24
Copy O 196

X-759
.57

Amendment No. 1
March 1967

STANDARDS ASSOCIATION OF AUSTRALIA
Incorporated by Royal Charter

#25

AMENDMENT No. 1
to
AS C347—1964
PVC INSULATION OF ELECTRIC CABLES AND FLEXIBLE CORDS

Page 5. **Clause 4, Description.**

In 1st paragraph, *delete* the last sentence and *substitute:*

Type V-105 is intended for the insulation of wiring within apparatus, where not exposed to mechanical damage, for continuous operation at a maximum temperature of 85°C and intermittent operation at a maximum temperature of 105°C. AMDT No. 1 MARCH 1967

Page 5. **Clause 7, Loss of Weight.**

Delete existing clause and *substitute:*

7 LOSS OF WEIGHT. The mean loss of weight due to ageing, when determined by the appropriate method described in Appendix D, shall be either less than 2.5 per cent of the original weight or less than 2 milligrammes per square centimetre of exposed surface of the specimen or specimens of insulation. AMDT No. 1 MARCH 1967

Page 7. **Clause 8, Thermal Deformation.**

Delete existing clause and *substitute:*

8 THERMAL DEFORMATION. The reduction in insulation thickness due to deformation under mechanical loads at elevated temperature, when determined in the manner described in Appendix E, shall not exceed 40 per cent. AMDT No. 1 MARCH 1967

Page 7. **Clause 12, Flame Resistance Test.**

In the heading of this clause *delete* "(Flame-resistant Insulation Only)". AMDT No. 1 MARCH 1967

In the first line of this clause *amend* "Flame-resistant insulation" to read "Insulation".

Price: 20c

2BCat
Subj Cat
2 - JUN 22
Copy 1967
X-T59
.57
#216

Amendment No. 2
January 1967

STANDARDS ASSOCIATION OF AUSTRALIA
Incorporated by Royal Charter

AMENDMENT No. 2

to

AS CA20—1960

THE ERECTION AND FIXING OF FIBROUS PLASTER PRODUCTS

Page 16. **Rule 15, Fixing of Sheeting.**

Delete existing preamble and Rule 15(a) (see Amendment No. 1, May 1964) and *substitute:*

15. FIXING OF WALL SHEETS. Wall sheets shall bear not less than 1 inch on the top plate, and bear adequately on the bottom plate or on a nogging provided for this purpose. The sheets shall be securely fixed in position either by clouting in accordance with clause (a) below, or by bonding with adhesive in accordance with clause (b) below: AMDT No. 2 JAN. 1967

(a) Fixing of Wall Sheets by Clouting. Where wall sheets are fixed by clouting to studs and/or battens the clouts shall be spaced as follows:

(i) In the body of the sheets at all bearings on battens, studs, or noggings—with clouts at not more than 21-inch centres.

(ii) Along the edges of sheets at vertical angles required to be stopped in accordance with Rule 14, and along the edges of sheets which are to be flush-jointed—with clouts spaced at not more than 6-inch centres.

NOTE: Mouldings are sometimes used in lieu of stopping.

(b) Fixing of Wall Sheets with Adhesive. Where wall sheets are fixed by bonding to studs or solid backgrounds with adhesive, the studs and backgrounds shall be free from dust, dirt, oil and other matter liable to inhibit the bond between the sheets and the studding or other background. Solid backgrounds shall be substantially even, smooth and free from any protrusions liable to adversely affect the fixing of the sheets.

2B Cat
Subj Cat

2 - JUN 22
Copy 1967

X-T59
.S7
#217

AS C175–1967 Ap.
UDC 621.312:621.315.674:
678.743.22

SAA Approval and Test Specification C175–1967

FITTINGS FOR RIGID PVC CONDUIT

JUL 01 1967

PUBLISHED BY THE STANDARDS ASSOCIATION OF AUSTRALIA, 157 GLOUCESTER STREET, SYDNEY
Incorporated by Royal Charter (COPYRIGHT)

2B Costal
Subj Cat

2 - JUL 24
Copy 0 1967

#218

Australian Standard K146 – 1967

ROAD MAR
PAINTS

STANDARDS ASSOCIATION OF

X-754

Amendment No. 1
June 1967

STANDARDS ASSOCIATION OF AUSTRALIA
Incorporated by Royal Charter

2 - SEP - 6
Copy 5 1967

X-754.57 #2

AMENDMENT No. 1
to
AS CA24.1—1964
GENERAL CONDITIONS OF CONTRACT FOR CIVIL ENGINEERING WORKS

Page 7. **Clause 4, Security.**

Delete existing items (*a*) to (*e*) and *substitute:*

(*a*) When the Contract Price is $2,000 or less—nil. AMDT No. 1 JUNE 1967

(*b*) When the Contract Price exceeds $2,000 but does not exceed $50,000—ten per cent of the Contract Price.

(*c*) When the Contract Price exceeds $50,000 but does not exceed $200,000—the sum of $5,000 plus five per cent of the amount of the Contract Price in excess of $50,000.

(*d*) When the Contract Price exceeds $200,000 but does not exceed $500,000—the sum of $12,500 plus four per cent of the amount of the Contract Price in excess of $200,000.

(*e*) When the Contract Price exceeds $500,000—the sum of $24,500 plus two and one half per cent of the amount of the Contract Price in excess of $500,000.

Page 16. **Clause 22.1, Control by and Decisions of the Engineer.**

Add on page 17, line 19, after the word "Contract":

", provided that, unless the Contractor so notifies and requires within two months after the date on which such order, instruction, direction, determination or approval was given, he shall not be entitled to have the said matter referred to arbitration." AMDT No. 1 JUNE 1967

Page 21. **Clause 31.3, Covering Up of Work.**

Delete existing text and *substitute:*

Covering Up of Work. The Contractor shall at all times allow the Engineer to inspect and measure any part of the Works. No part of the Works shall have further work placed thereon or shall be covered up or put out of view without the approval of the Engineer, whose approval shall not be unreasonably withheld or delayed. AMDT No. 1 JUNE 1967

Page 24. **Clause 37.1, Period of Maintenance and Contractor's Responsibility.** AMDT No. 1 JUNE 1967

In line 37, *alter* the words "Annexure B" to "Annexures A and B".

Page 35. **Annexure A.**

Add the following new line after the line commencing "The Works shall be completed . . . . . ": AMDT No. 1 JUNE 1967

The Period of Maintenance is **(Clause 37)** .....

Page 47. **Certificate.** AMDT No. 1 JUNE 1967

Alter the currency symbols to dollars and cents symbols.

2 B Cataloging, Subj Cat. Div
2 - SEP - 6
Copy 0 1967
X-T59
.S7 #220

Amendment No. 1
May 1967

STANDARDS ASSOCIATION OF AUSTRALIA

Incorporated by Royal Charter

AUSTRALIAN AMENDMENT No. 1

to

AS B46—1953

BRITISH ASSOCIATION (B.A.) SCREW THREADS

Insert the following in prominent position in standard:

OBSOLESCENT SCREW THREADS

AUST. AMDT No. 1 MAY 1967

The change to ISO Screw Threads is progressing rapidly throughout the world and the Standards Association of Australia considers it necessary to insert a relevant note in each standard which specifies obsolescent screw threads.

The British Standards Institution issued an Amendment No. 1 to B.S. 93 (PD 5903) in August 1966, in which strong recommendations for the use of ISO Screw Threads are made.

The SAA wishes to emphasize that screw threads specified in this standard are obsolescent and should not be used for new or revised designs. *Wherever possible ISO Screw Threads should be used.*

The SAA Committee on Screw Threads realizes, however, that B.A. threads are still very widely used and that their use can be expected to diminish only gradually during the transition period that may occupy ten years or so. Accordingly, this standard will be needed throughout the transition period.

In due course, when these threads become obsolete, the standard will be withdrawn.

X-T59
.S7 #221

AS A176—1968
UDC 625.067

Australian Standard A176—1968

TYNES FOR MOTOR GRADER SCARIFIERS

2-MAR 10
Copy ____ 19__

STANDARDS ASSOCIATION OF AUSTRALIA
Incorporated by Royal Charter

X-T 59
.S7 #222
2B Cataloging
Subj Cat Div

AS S2 — 1968
UDC 643.35:389.1

Australian Standard
S2 — 1968

MEASURING CUPS AND SPOONS
FOR DOMESTIC PURPOSES

STANDARDS ASSOCIATION OF AUSTRALIA
Incorporated by Royal Charter

X-T59
.S7 #223

AS A40—1968
UDC 625.087

Australian Standard A40—1968

CUTTING EDGES FOR GRADERS

2-MAR 1 0
Copy 1969

STANDARDS ASSOCIATION OF AUSTRALIA
Incorporated by Royal Charter

X-T59
.S7 #224

AS A85 — 1968
UDC 625.067

Australian Standard A85—1968

CUTTING EDGES FOR DOZERS AND SCRAPERS

2-MAR 1 0
Copy 1969

STANDARDS ASSOCIATION OF AUSTRALIA
Incorporated by Royal Charter

X-T59
.S7 #225

AS B278—1968
UDC 261.883.7

Australian Standard B278—1968

SHACKLES

FOR LIFTING PURPOSES

2-MAR 1 0
Copy 1969

STANDARDS ASSOCIATION OF AUSTRALIA
Incorporated by Royal Charter

TO GUARD OFFICE
THIS PERIODICAL
FOR STAFF USE
22 PLEASE PASS

AS CB23—1969
UDC 661.51:614.83

X-T59
.S7
#226
2 -APR 28
Copy 0 1969

Australian Standard CB23 – 1969

SAA CODE FOR ANHYDROUS AMMONIA

STANDARDS ASSOCIATION OF AUSTRALIA
Incorporated by Royal Charter